Techno

Fixed shower head and arm

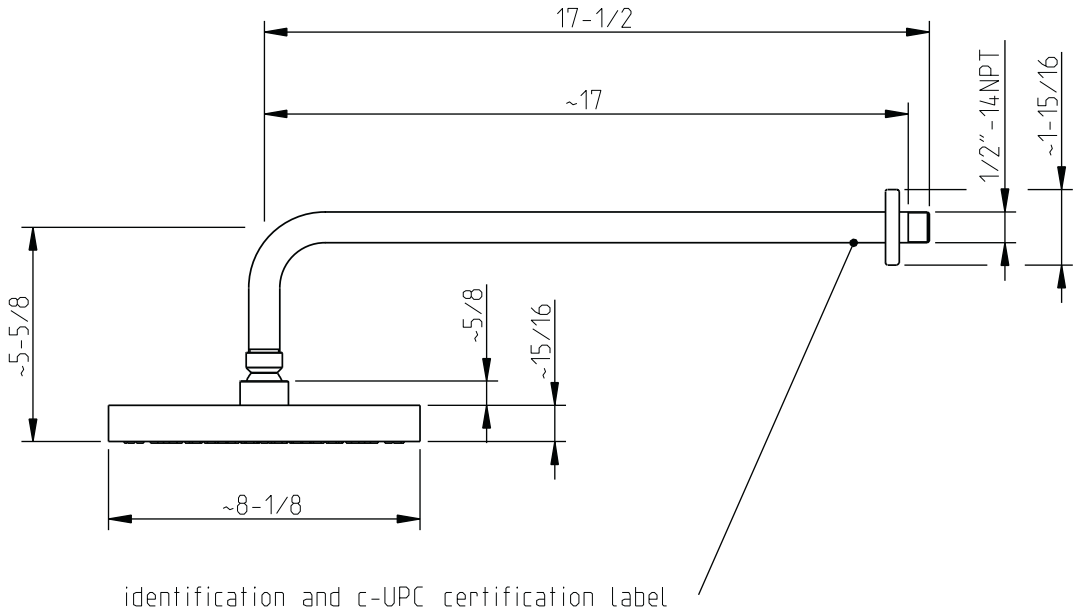

CIFIAL

www.cifial.pt | cifial@cifial.pt
cifial@cifial.es
www.cifial.co.uk | sales@cifial.co.uk
www.cifialusa.com
www.cifial.pl | cifial@cifial.pl

dimensions inches

5665199
983TH034W00

technical specifications
note: xxx represent different finishes

code: 221 870 xxx

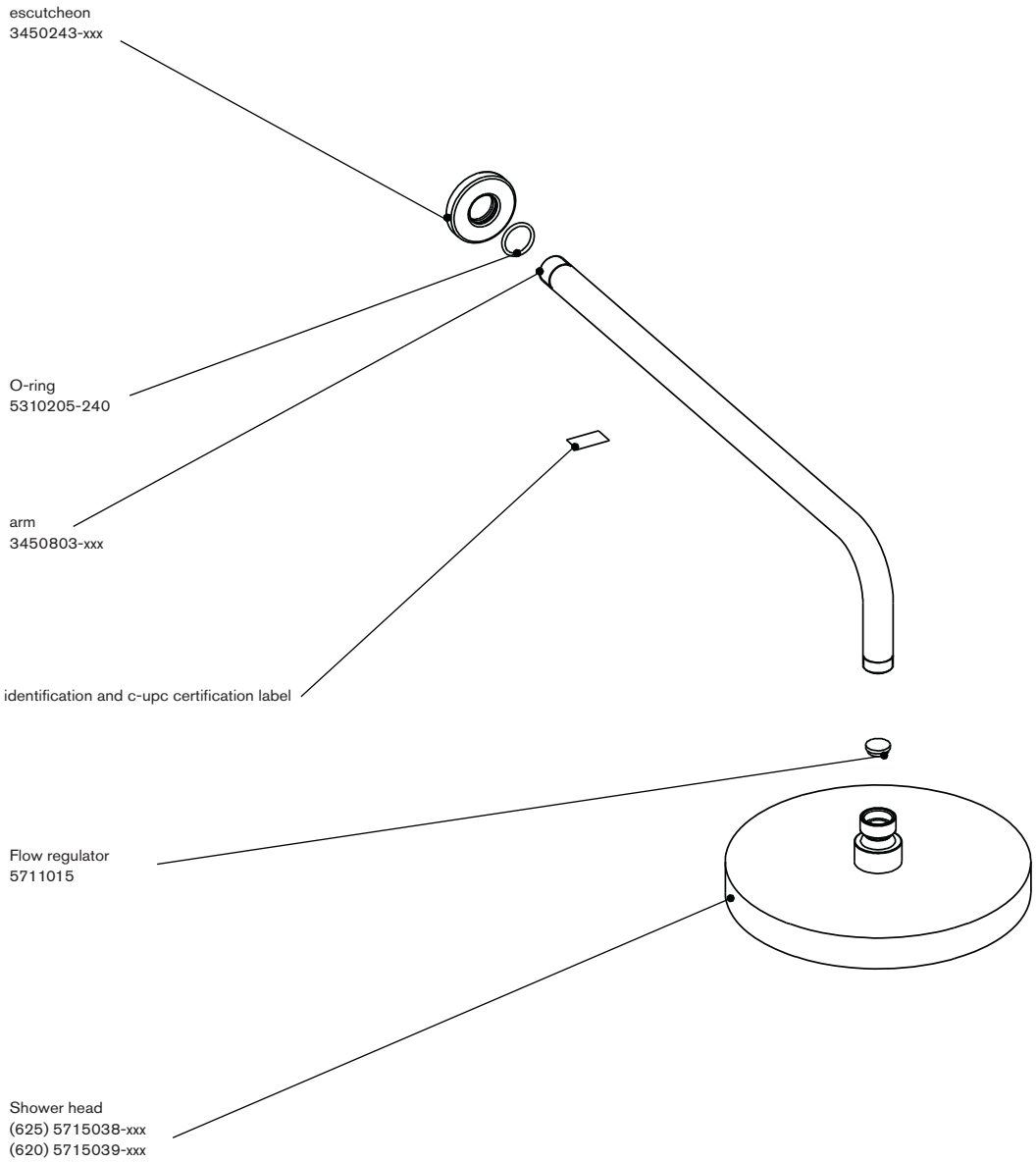

COMPLETE
BATH
SOLUTIONS

www.cifial.pt | cifial@cifial.pt
cifial@cifial.es
www.cifial.co.uk | sales@cifial.co.uk
www.cifialusa.com
www.cifial.pl | cifial@cifial.pl

5665199
983TH034W00