Techno

Wall mount handshower

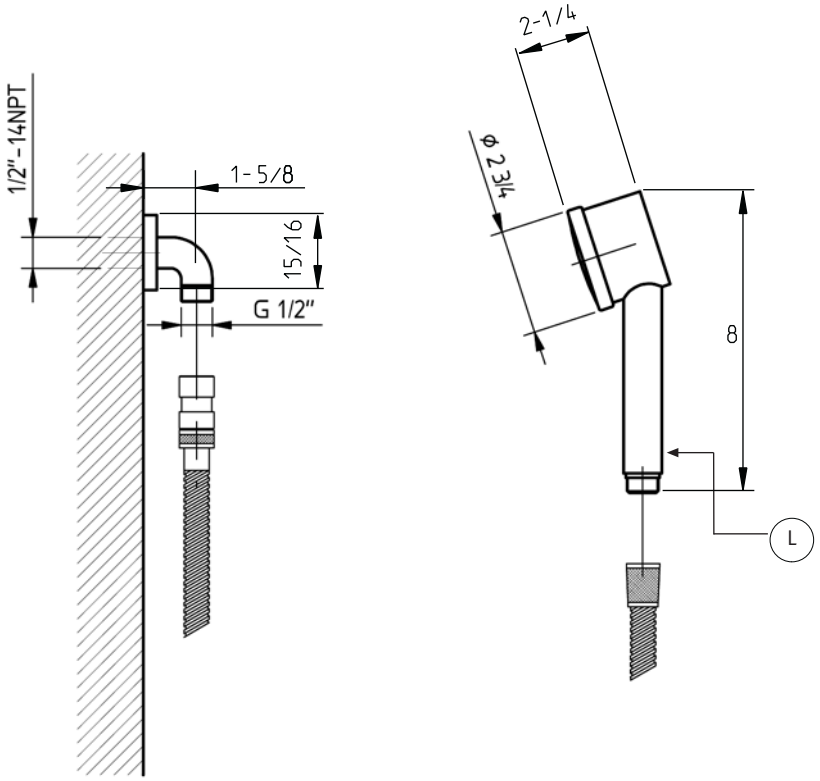

www.cifial.pt | cifial@cifial.pt
cifial@cifial.es
www.cifial.co.uk | sales@cifial.co.uk
www.cifialusa.com
www.cifial.pl | cifial@cifial.pl

dimensions inches

Lenght of hose - 60”

L identification and certification label position.

5663218
983TH007W04

technical specifications
note: xxx represents different finishes

code: 221 872 xxx

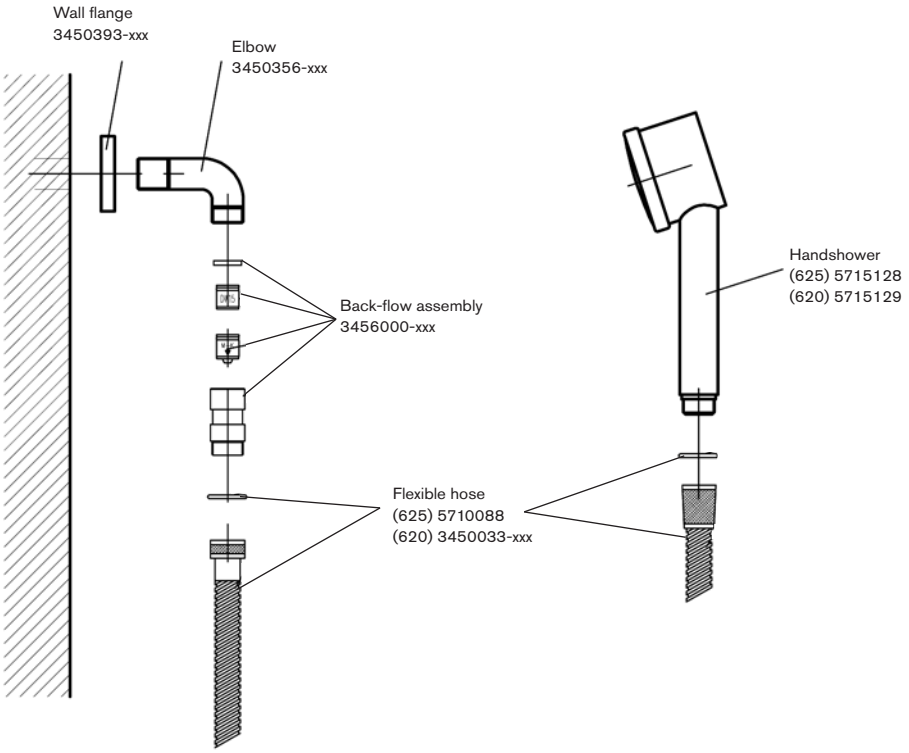

COMPLETE
BATH
SOLUTIONS

www.cifial.pt | cifial@cifial.pt
cifial@cifial.es
www.cifial.co.uk | sales@cifial.co.uk
www.cifialusa.com
www.cifial.pl | cifial@cifial.pl

5663218
983TH007W04