ASBURY

4” centerset bar faucet

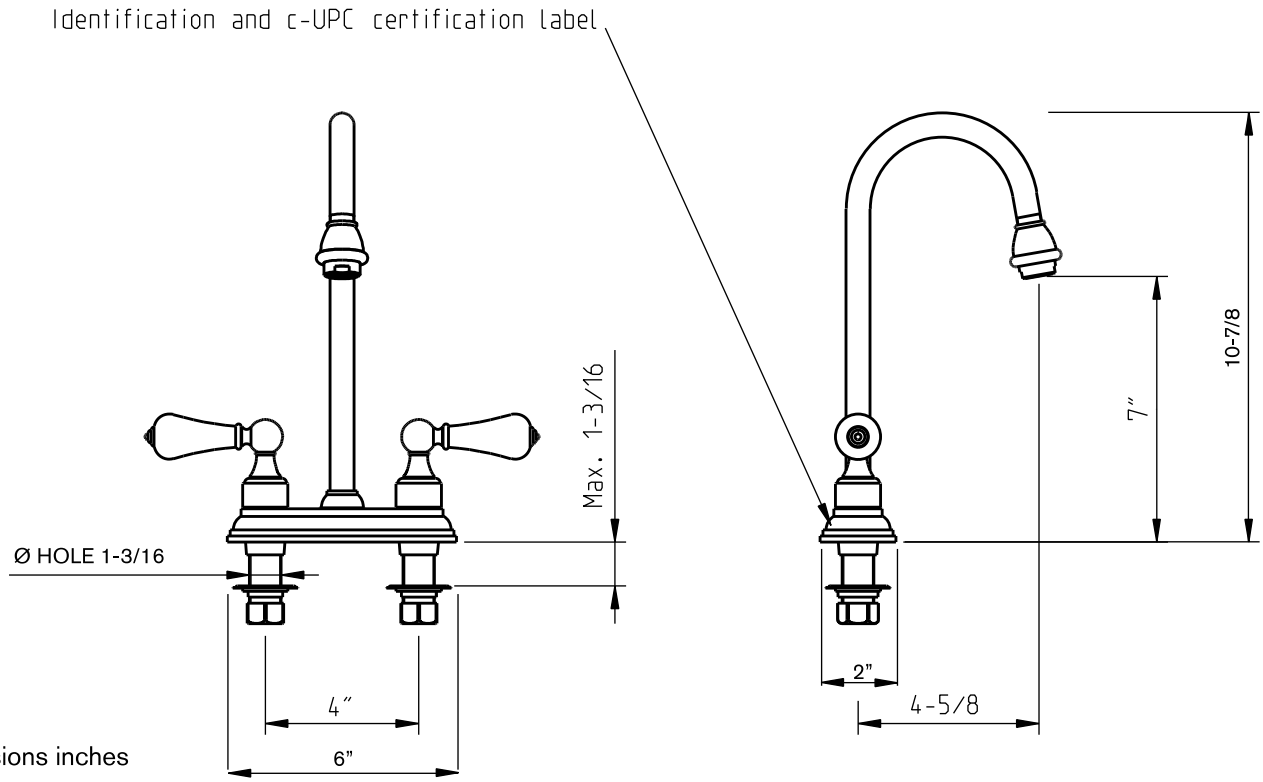

dimensions inches

www.cifial.pt | cifial@cifial.pt
cifialdecor@infonegocio.com
www.cifial.co.uk | sales@cifial.co.uk
www.cifialusa.com | info@cifialusa.com

5663880
983OD047W01

technical specifications
note: xxx represent different finishes

code: 275 225 xxx

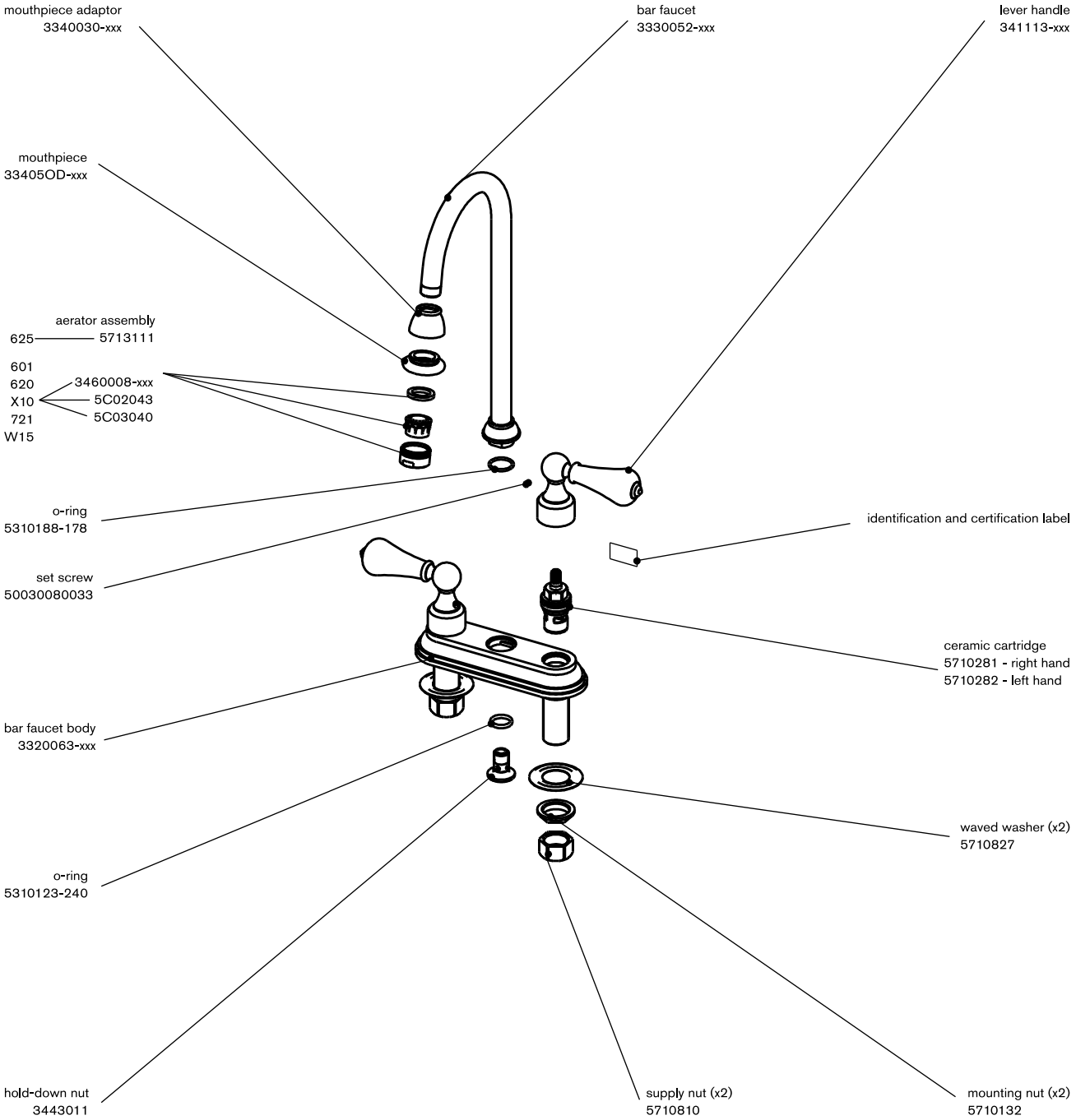

COMPLETE
BATH
SOLUTIONS

www.cifial.pt | cifial@cifial.pt
cifialdecor@infonegocio.com
www.cifial.co.uk | sales@cifial.co.uk
www.cifialusa.com | info@cifialusa.com

5663880
983OD047W01