3-Hole Bidet Mixer

MODEL # 24015

Pure Freude an Wasser

GROHE

GROHE America, Inc | 200 North Gary Avenue, Suite G, Roselle, IL 60172
Phone: +1 (800) 444-7643 | Fax: +1 (800) 225-2778 | us-customerservice@grohe.com

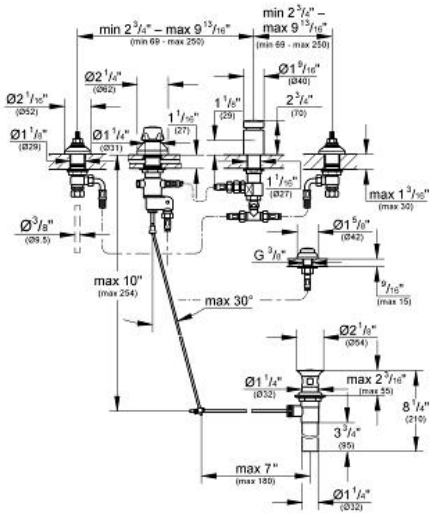

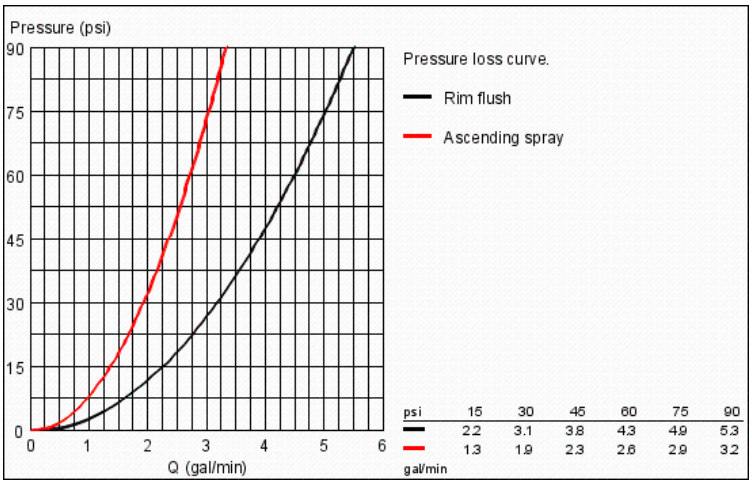

UPC C ®

Product Description:
3-Hole Bidet Mixer

Standard Specification:
- Handles sold separately
- Vertical spray and rim flush
- **GROHE StarLight®** finish
- **GROHE SilkMove®**
- Solid brass body
- Vacuum breaker
- Combination transfer valve/pop-up lift rod
- Less handles – order (18 083) or (18 084) (sold separately)

Applicable Codes & Standards:
- Energy Policy Act of 1992
- ASME A112.18.1/CSA B125.1

Color:
- ❑ 24015 000 chrome
- ❑ 24015 EN0 brushed nickel