GENEVA
3-Hole Bidet Mixer
MODEL # 24019

Pure Freude an Wasser

GROHE

GROHE America, Inc | 200 North Gary Avenue, Suite G, Roselle, IL 60172
Phone: +1 (800) 444-7643 | Fax: +1 (800) 225-2778 | us-customerservice@grohe.com

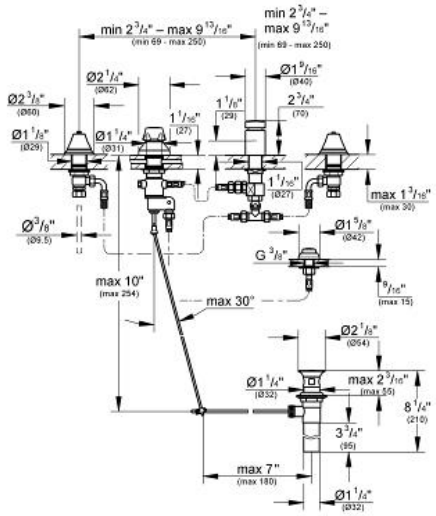

Product Description:
3-Hole Bidet Mixer

Standard Specification:
- Vertical spray and rim flush
- With anti-siphon device
- Pressure resistant flexible connection hoses
- Less handles - order Geneva Cross Handles (18 733) or Geneva Lever Handles (18 734) (sold separately)
- **GROHE StarLight®** finish

Applicable Codes & Standards:
- Energy Policy Act of 1992
- ASME A112.18.1/CSA B125.1

Color:
- ❑ 24019 000 chrome
- ❑ 24019 BE0 sterling / brilliant nickel
- ❑ 24019 EN0 brushed nickel
- ❑ 24019 ZB0 oil rubbed bronze