GRANDERA
Two-handle bidet mixer 1/2" M-Size

MODEL # 24034

Pure Freude an Wasser

GROHE

GROHE America, Inc | 200 North Gary Avenue, Suite G, Roselle, IL 60172
Phone: +1 (800) 444-7643 | Fax: +1 (800) 225-2778 | us-customerservice@grohe.com

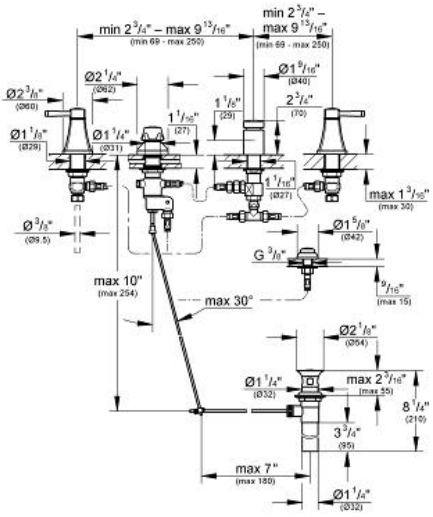

ADA

Product Description:
Two-handle bidet mixer 1/2"
M-Size

Standard Specification:
- Five hole installation
- Valves hot/cold with 1/2" cartridge (90°)
- **GROHE StarLight®** finish
- Vertical spray and rim flush
- Vacuum breaker
- Combination transfer valve/pop-up lift rod
- Stainless steel flex lines
- Max Flow Rate 2.2 gpm

Applicable Codes & Standards:
- Energy Policy Act of 1992
- ASME A112.18.1/CSA B125.1
- ICC/ANSI A117.1
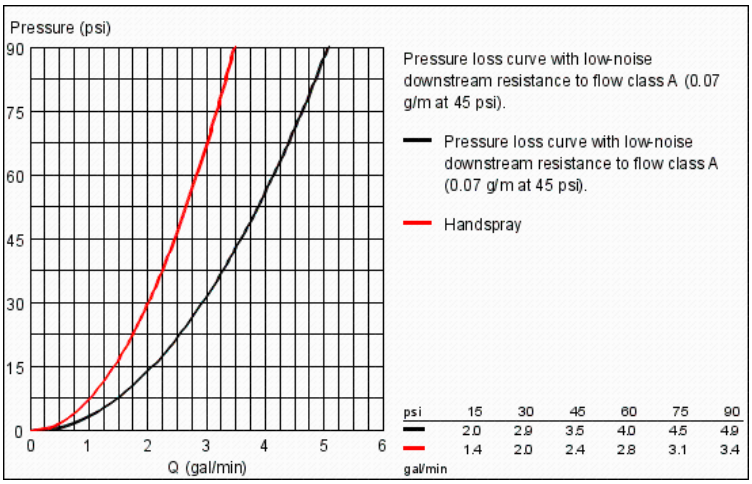
Color:
- ❑ 24034 000 chrome
- ❑ 24034 DA0 Warm Sunset
- ❑ 24034 EN0 brushed nickel