BRIDGEFORD
Roman Tub Filler
MODEL # 25079

Pure Freude an Wasser

GROHE

GROHE America, Inc | 200 North Gary Avenue, Suite G, Roselle, IL 60172
Phone: +1 (800) 444-7643 | Fax: +1 (800) 225-2778 | us-customerservice@grohe.com

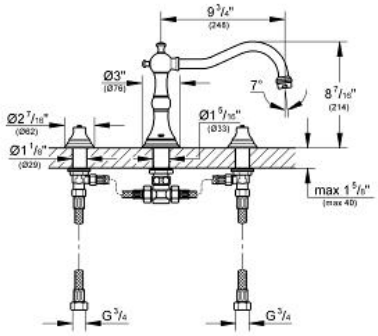

Product Description:
Roman Tub Filler

Standard Specification:
- Handles sold separately
- Diverter bath spout with flow control
- Side valves
- 1/2" ceramic cartridge (90° turn)
- Pressure resistant flexible connection hoses (between spout and side valves)
- **GROHE StarLight®** finish
- Max Flow Rate 13.2 gpm (50 L/min)

Applicable Codes & Standards:
- Energy Policy Act of 1992
- ASME A112.18.1/CSA B125.1
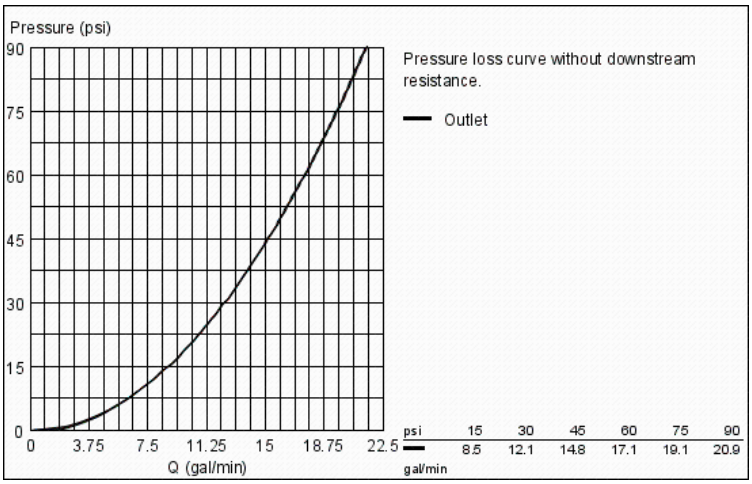
Color:
- ❑ 25079 000 chrome
- ❑ 25079 EN0 brushed nickel
- ❑ 25079 ZB0 oil rubbed bronze