EUROSMART
2-hole Single-Lever Bath Combination

MODEL # 32645

Pure Freude an Wasser

GROHE

GROHE America, Inc | 200 North Gary Avenue, Suite G, Roselle, IL 60172
Phone: +1 (800) 444-7643 | Fax: +1 (800) 225-2778 | us-customerservice@grohe.com

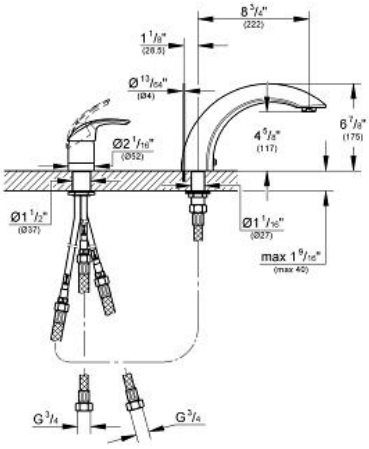

ADA

Product Description:
2-hole Single-Lever Bath Combination

Standard Specification:
- **GROHE StarLight®** finish
- Max Flow Rate 6.3 gpm (23.8 L/min)

Applicable Codes & Standards:
- Energy Policy Act of 1992
- ASME A112.18.1/CSA B125.1
- ICC/ANSI A117.1

Color:
- ❑ 32645 001 chrome
- ❑ 32645 EN1 brushed nickel